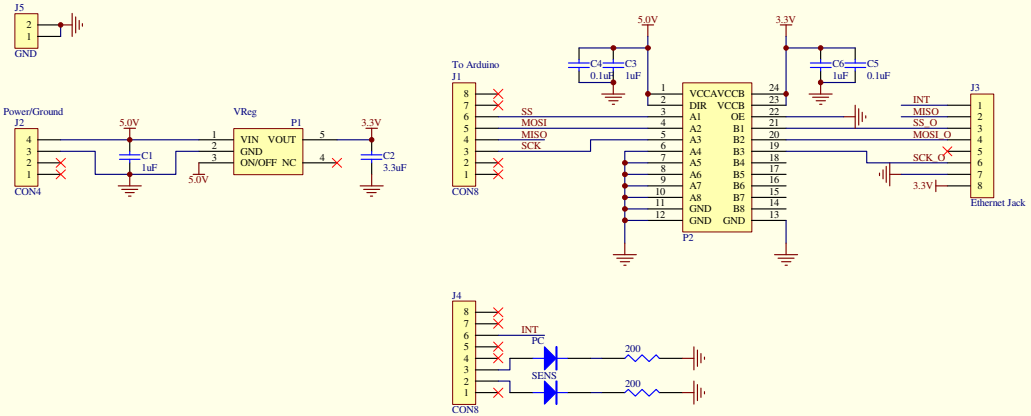

Title	Vibrotactile Stimulus Verifier	
Size B	Number	Revision 1.0
Date: 4-Mar-2008	Sheet of	
File: C:\Documents and Settings\me\My Documents\Drawing\Calibration Board\Protel\NewTactorBord.ddb	Drawn by:	